GT Series Tenant Station with GT-RY Wiring Diagram

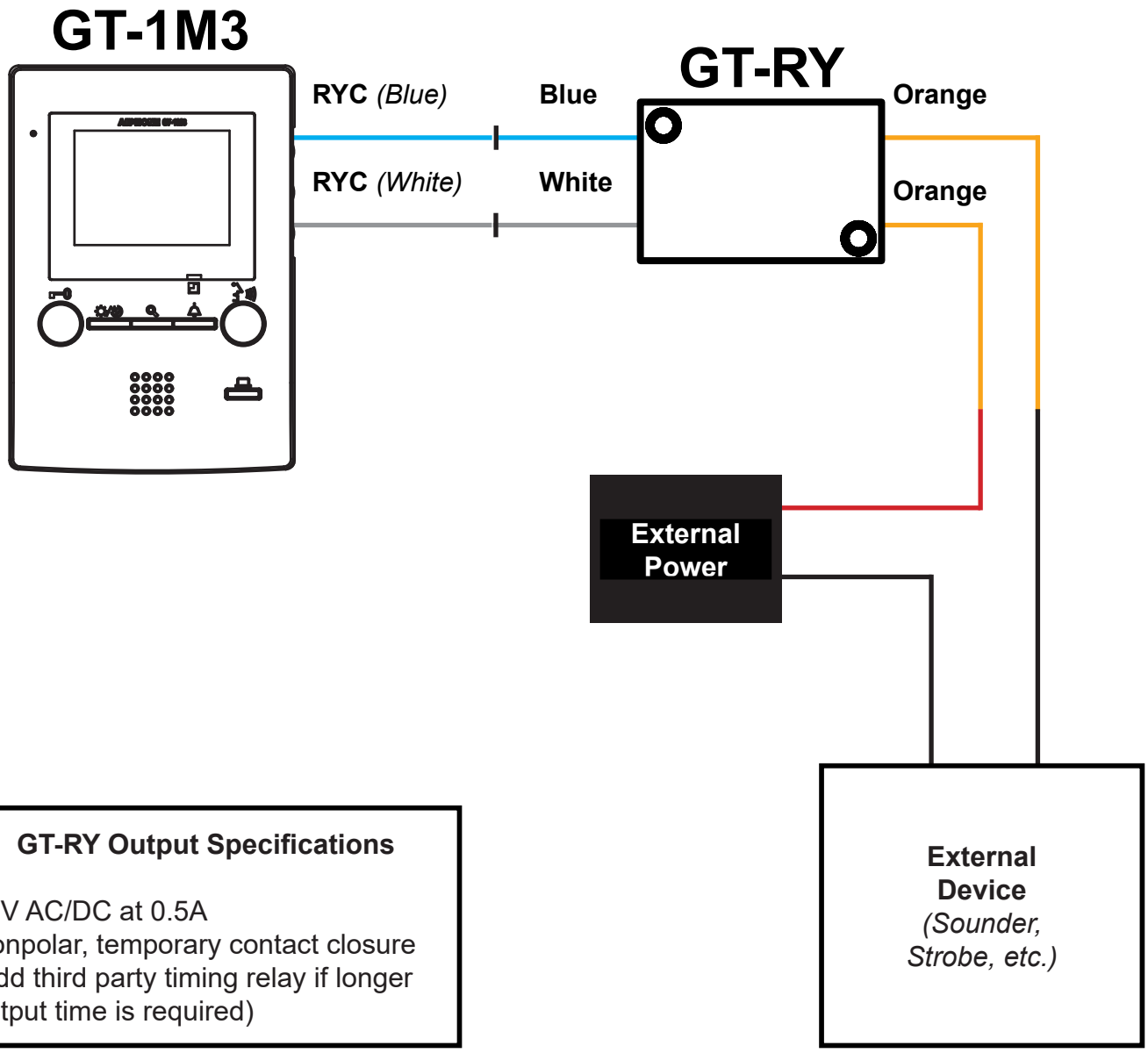

GT-RY Output Specifications

24V AC/DC at 0.5A
Nonpolar, temporary contact closure (add third party timing relay if longer output time is required)